Reflection™

REFLECTION 5.0 / 4.3 OCTAVE MARIMBA

USER MANUAL



majestic®

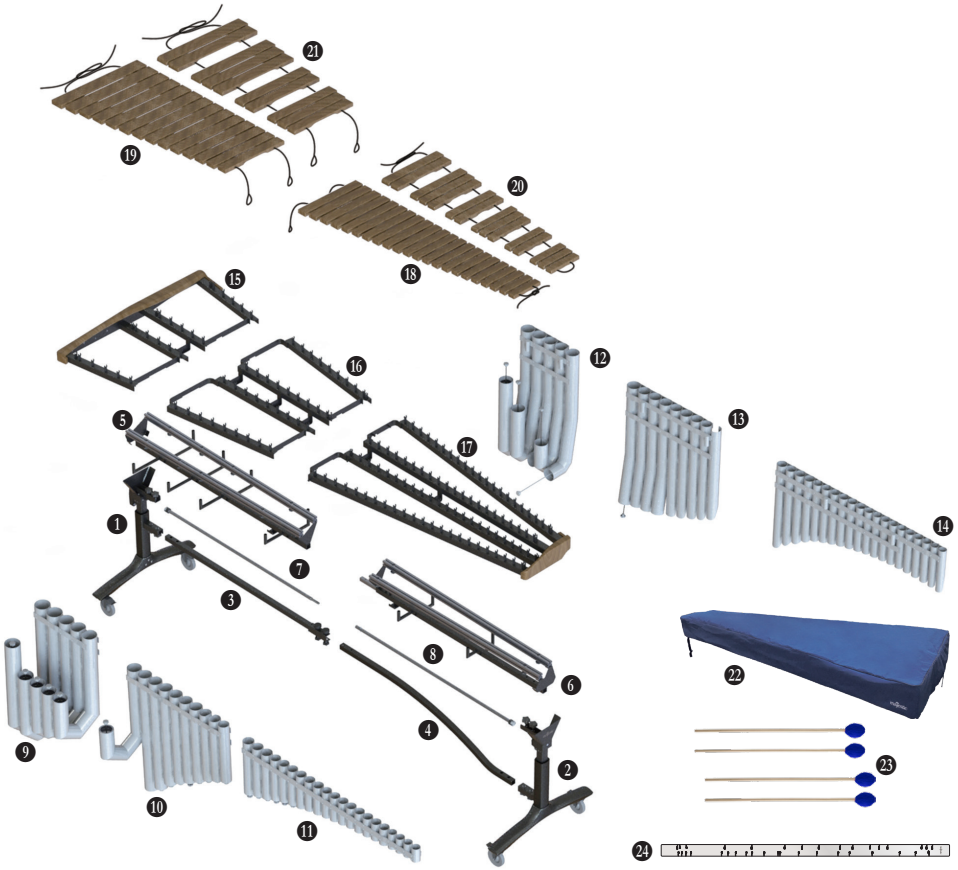

Item	Parts Description	Inner Carton
1	Leg Assembly – Bass End (with height adjustment handle)	1/11
2	Leg Assembly – Treble End	2/11
3	Cross Bar – Bass End (straight)	3/11
4	Cross Bar – Treble End (curved)	3/11
5	Truss – Bass End	3/11
6	Truss – Treble End	3/11
7	Transmission shaft for height adjustment – connecting side (male)	3/11
8	Transmission shaft for height adjustment – receiving side (female)	3/11
9	Resonator – Natural Bass Section (C2 – G2)	4/11
10	Resonator – Natural Middle Section (A2 – C4)	5/11
11	Resonator – Natural Treble Section (D4 – C7)	6/11
12	Resonator – Accidental Bass Section (C#2 – G#2)	7/11
13	Resonator – Accidental Middle Section (A#2 – B#3)	8/11
14	Resonator – Accidental Treble Section (C#4 – A#6)	6/11
15	Rack – Bass Section	9/11
16	Rack – Middle Section	10/11
17	Rack – Treble Section	10/11
18	Tone Bars – Natural Treble Section (C4 – C7)	11/11
19	Tone Bars – Natural Bass Section (C2 – B3)	11/11
20	Tone Bars – Accidental Treble Section (C#4 – A#6)	11/11
21	Tone Bars – Accidental Bass Section (C#2 – A#3)	11/11
22	Protective Cover	11/11
23	Mallets x 2 PR	11/11
24	Tuning Scale	11/11

Components M843H

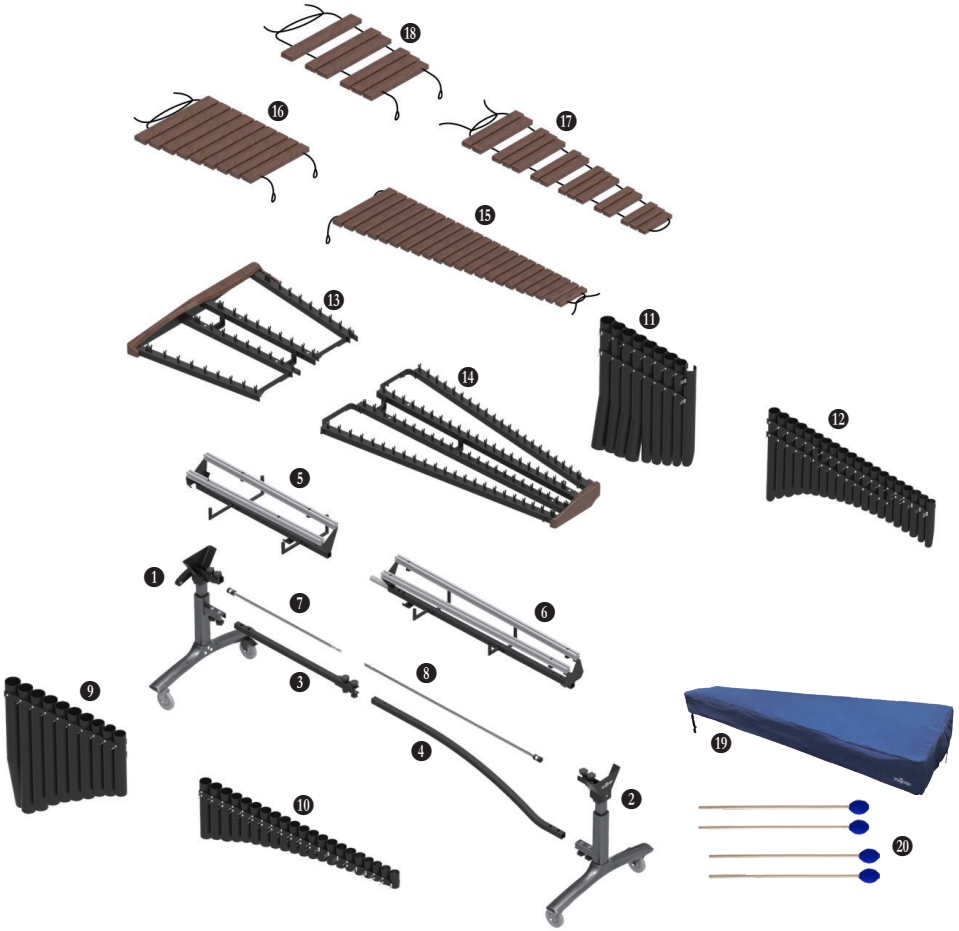

Item	Parts Description	Inner Carton
1	Leg Assembly – Bass End (with height adjustment handle)	1/7
2	Leg Assembly – Treble End	2/7
3	Cross Bar – Bass End (straight)	3/7
4	Cross Bar – Treble End (curved)	3/7
5	Truss – Bass End	3/7
6	Truss – Treble End	3/7
7	Transmission Shaft for height adjustment – connecting side (male)	3/7
8	Transmission Shaft for height adjustment – receiving side (female)	3/7
9	Resonator – Natural Bass Section (A2 - C4)	5/7
10	Resonator – Natural Treble Section (D4 - C7)	4/7
11	Resonator – Accidental Bass Section (A#2 - B#3)	5/7
12	Resonator – Accidental Treble Section (C#4 - A#6)	4/7
13	Rack – Bass Section	6/7
14	Rack – Treble Section	6/7
15	Tone Bars – Natural Treble Section (C4 – C7)	7/7
16	Tone Bars – Natural Bass Section (A2 – B3)	7/7
17	Tone Bars – Accidental Treble Section (C#4 – A#6)	7/7
18	Tone Bars – Accidental Bass Section (A#2 – A#3)	7/7
19	Protective Cover	7/7
20	Mallets x 2 PR	7/7

1. Connect the cross bar (❸+❹)
Remove the knobs pre-installed to bass end cross bar (straight) from the bracket.
Align the 2 connecting holes on treble end cross bar (curved) to the holes on bracket.
Tighten the knobs.

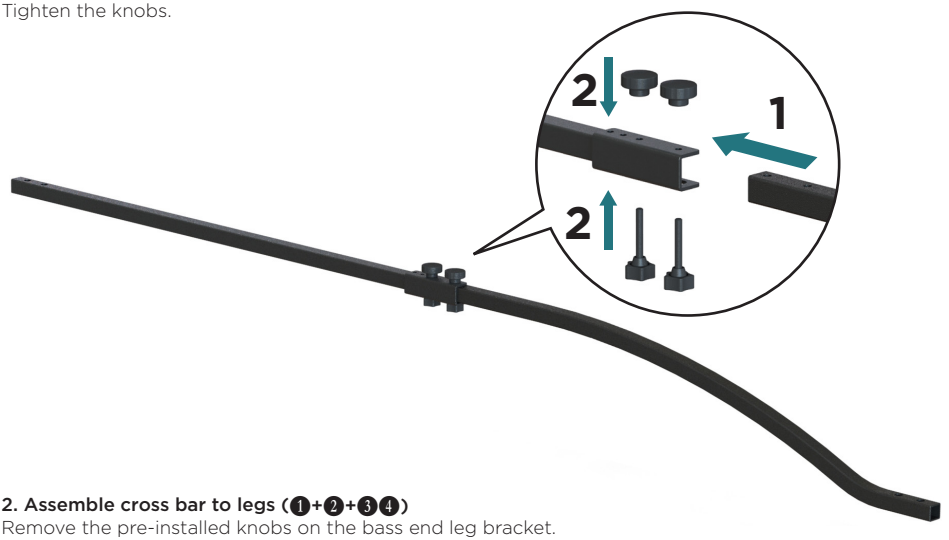

2. Assemble cross bar to legs (❶+❷+❸❹)
Remove the pre-installed knobs on the bass end leg bracket.
Insert the straight end section of the cross bar into the bracket and align the holes.
Insert knobs and tighten.

Repeat the process at the other end.

⚠ *Engage brakes before putting Leg Assembly together to provide stability and traction. Wheels with brake should be positioned facing audience side.*



⚠ *Make sure the pins in bracket are inserted into the holes on cross bar before tightening knobs.*

Assemble Truss

1. Assemble the truss (❺+❻)
Loosen and remove the quick release mechanism on bass end truss.
Connect the treble and bass truss sections together by fully inserting the connecting end of the treble section into the receiving end of the bass section.
Restore and tighten the quick release mechanism.

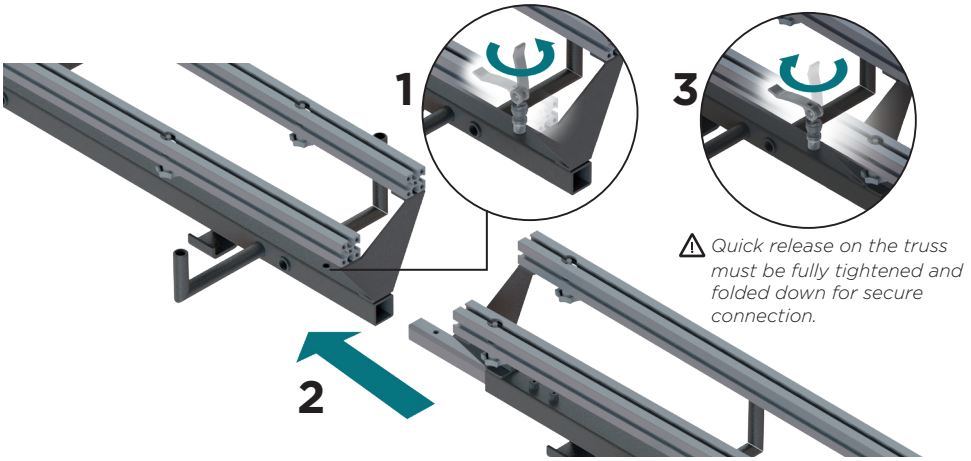

⚠ *Quick release on the truss must be fully tightened and folded down for secure connection.*

2. Attach truss frame to leg assembly (❺❻+❶~❹)
Remove both knobs from each leg assembly truss receiver.
Set the truss center bar into the receiving bracket of each leg assembly.
Insert knobs and tighten on both ends.

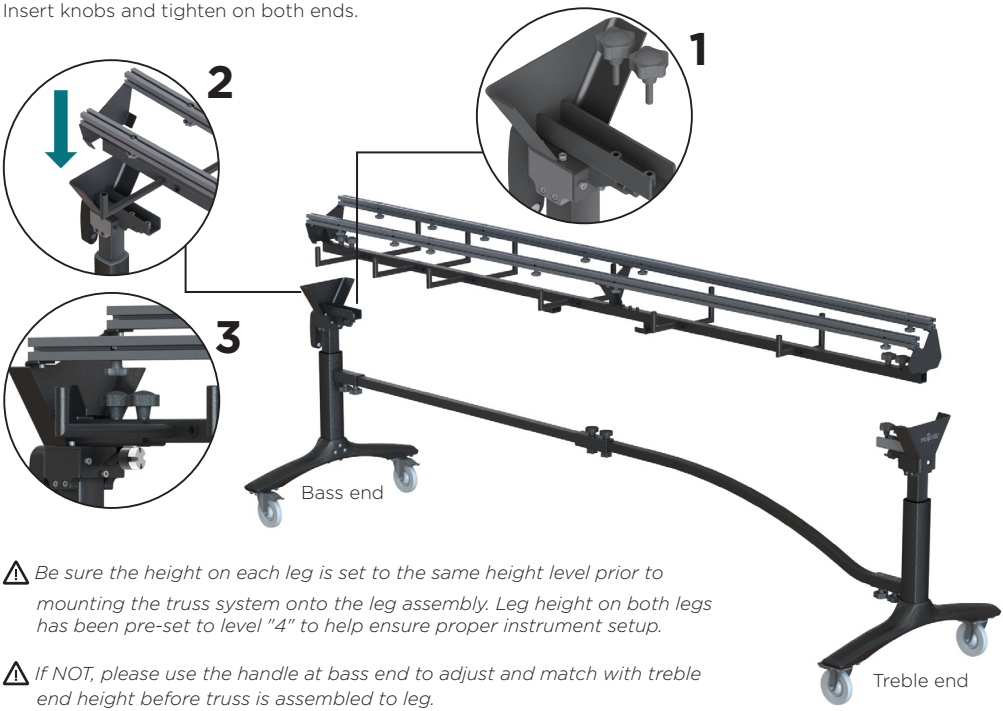

⚠ *Be sure the height on each leg is set to the same height level prior to mounting the truss system onto the leg assembly. Leg height on both legs has been pre-set to level "4" to help ensure proper instrument setup.*

⚠ *If NOT, please use the handle at bass end to adjust and match with treble end height before truss is assembled to leg.*

Assemble Transmission Shaft (❼+❽)

Take the connecting side (male) shaft, and lay it on the support platform.
Connect the coupling to bass end leg.

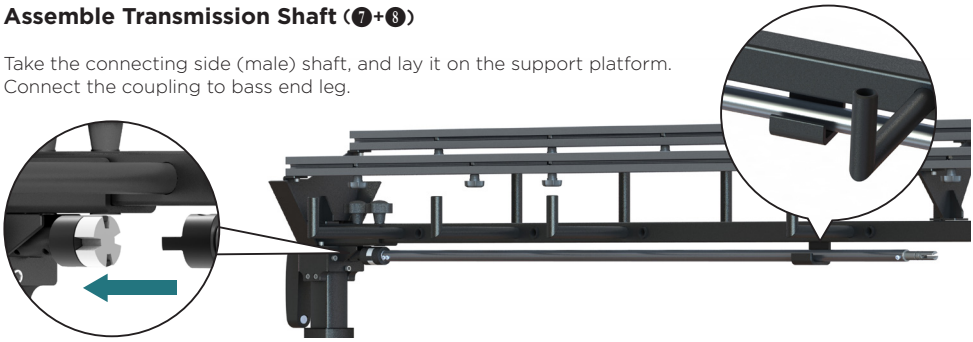

Take the receiving side (female) shaft, and lay it on the other support platform.
Push the spring pin on connecting tube, and connect the shafts.
Make sure the indicators (a nut on both sides) are aligned.

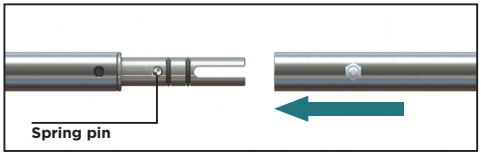

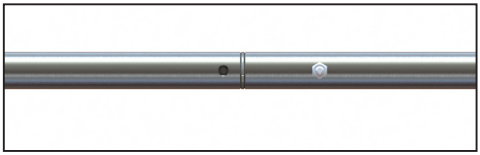

Connect the receiving side (female) shaft coupling to treble end leg.
The spring pin will lock both sides of shaft in place.

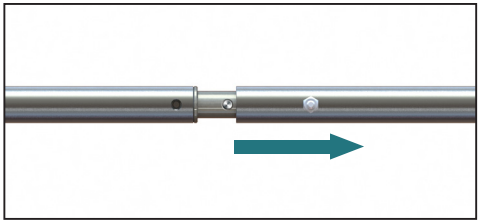

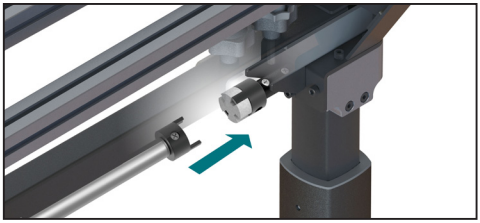



⚠ *There will be a small gap between the two sections of the shaft once it has been assembled and connected properly to the treble end leg.*

⚠ *To check whether the shaft is assembled properly, use the handle at bass end leg to adjust height. Both sides should move up or down simultaneously.*

Resonator Assembly

Slide resonator set onto the support arms extended from truss.
There are 3 sections on each side of M850H / 2 sections on each side of M843H.

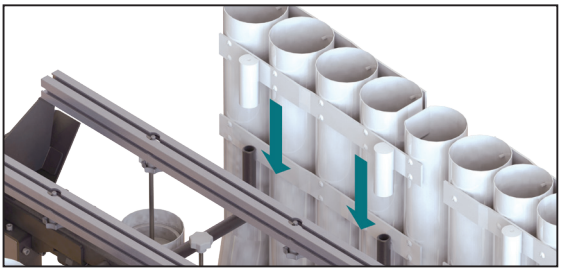

(Below shows M850H)

⚠ Due to package space constraints, the G#2 tuning cap is not pre-installed in the resonator tube. Be sure to insert this cap prior to setting up the resonators.



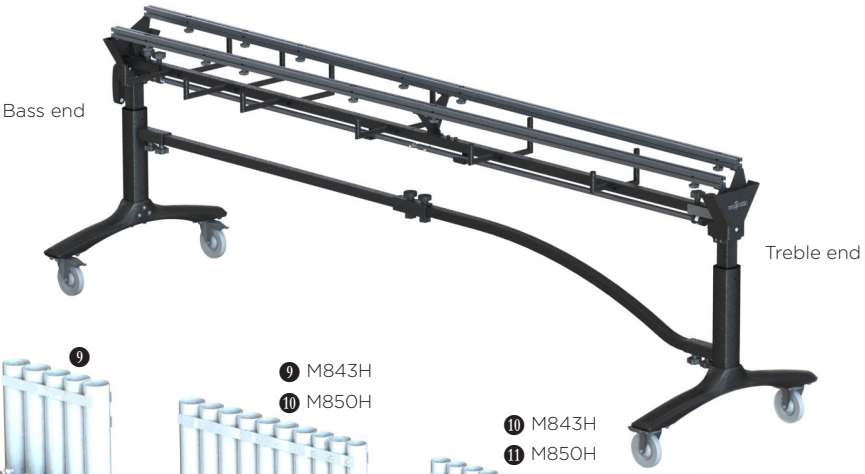



Put the rack on top of the truss, bar posts facing up.
Tighten the knobs (4 knobs every section) underneath truss to secure the racks.

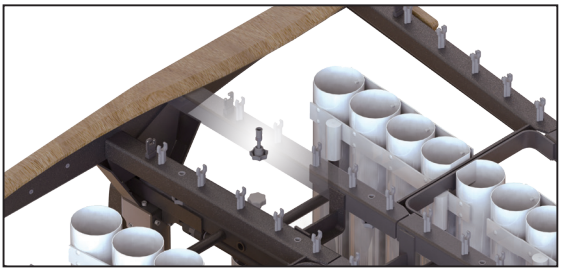

(Below shows M850H)

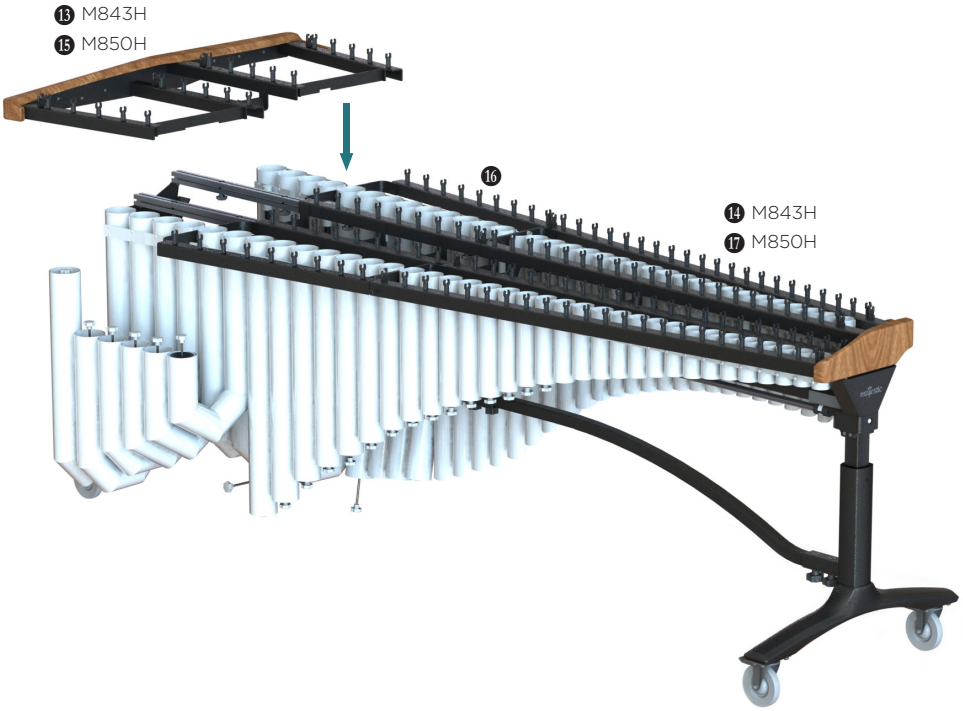

Tone Bar Placement

Natural Bars

1. Treble Section (⓲M850H/⓯M843H)
Gently lay the treble section natural bars on rack.
Bar cord should go around metal post before hooking on the inner side columns.

Position each tone bar between bar posts, beginning from bass (large) end, working progressively toward treble (small) end.

Once tone bars are in place, pull excess bar cord to treble end, and bring bar cord around metal posts. Tighten cord fastener.





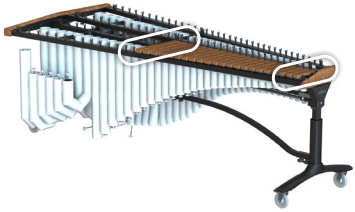

⚠ When tightening bar cord, be sure to pull the cord taut.

2. Bass Section (⓳M850H/⓰M843H)
Gently lay the bass section natural bars on rack.
Bar cord should go around metal post before hooking on the outer side columns.

Repeat the same process as treble end, but position tone bars from treble (small) to bass (large) end.





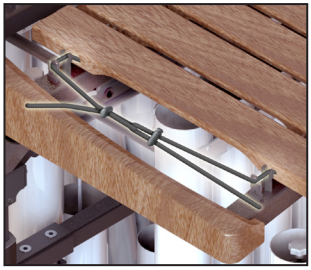

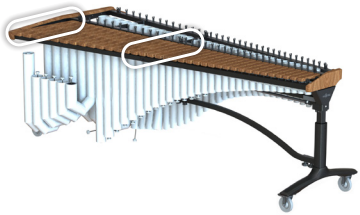

⚠ When tightening bar cord, be sure to pull the cord taut.

Accidental Bars

1. Treble Section (⑳M850H/⑰M843H)
Gently lay the treble section accidental bars on rack.
Closed bar cord should go around metal posts at treble end.

Position each tone bar between bar posts, beginning from treble (small) end, working progressively toward bass (large) end. Place bars over capped resonators only.

Once tone bars are in place, pull excess bar cord to bass end, and bring bar cord around metal posts. Tighten cord fastener.



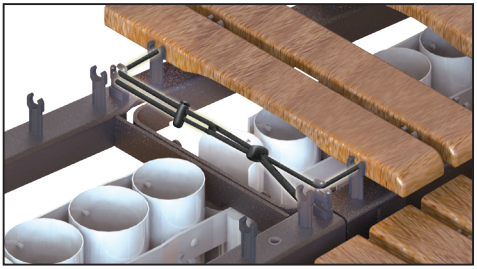

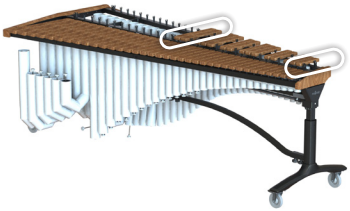

⚠ When tightening bar cord, be sure to pull the cord taut.

2. Bass Section (㉑M850H/⑱M843H)
Gently lay the bass section acidental bars on rack.
Bar cord should go around metal post before hooking on the columns at inner side.

Repeat the same process as treble end.

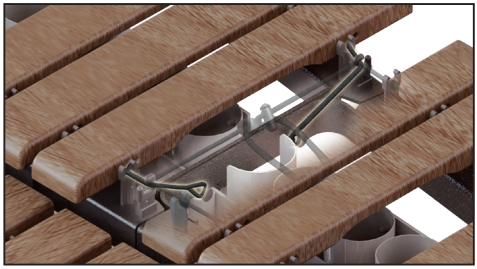

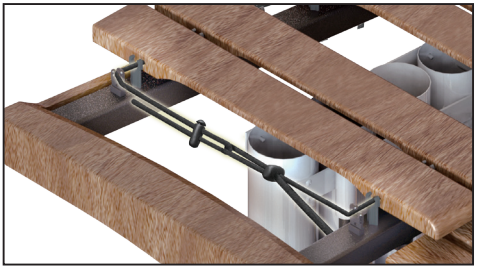

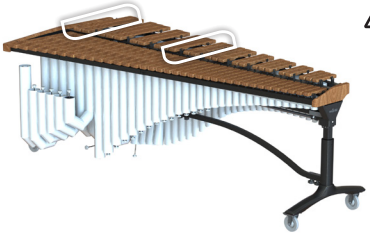

⚠ When tightening bar cord, be sure to pull the cord taut.

Maintenance Notes

1. How to use tuning cap (M850H)
Syringe-inspired tuning system ensures an air-tight seal and allows for quick, easy adjustment to environment.





Simply pull and push the rod of each tunable cap to ideal tonal position.

All tuning caps were processed with lubricant to ensure smoothness. It may wear out through time. We strongly recommend using a silicon based spray lubricant.

Lightly spray on the rubber fins of tuning cap, and wipe clean excess fluid to avoid running or dripping.

* Each tuning cap is intended for the specific resonator in which it is originally inserted. For best results, caps should not be moved to different tubes.

2. How to move the instrument safely
Grasp the bottom of the bass end piece. You will feel the metal structure inside. Please hold this to pull / push the instrument for the utmost safety and support.



3. How to handle the bar set safely
The innovative modular frame and bar set design splits natural and accidental bars into 2 sections each. This makes it extremely easy for one person to lift and install the bar sets.

Due to our special design, you will find the bar cords have one open end (except for #20 Accidental Treble Section bars).
Please remember to hold open end bar cords tightly, in order to lift the bar set safely.

4. Pull the bar cord tight
Make sure to pull the bar cord tight when placing bar sets.
The soft bar cord material works together with our free-floating bar posts, but slack in the cord will impair results.

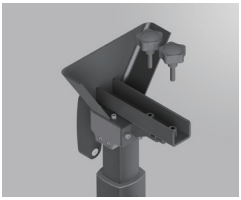

5. Keep the transmission shaft safe
When disassembling the instrument, please do not overtighten the knobs which are used to secure the truss (see accompanying image).
It may damage the transmission shaft connecting coupling.

6. Reflection marimba requires **no extra tool** to assemble, except for the knobs that come with your instrument. Please do not disassemble any parts with tool besides your hands.

7. If parts or warranty service should be needed, please contact the dealer through which the instrument was purchased. Please be prepared to provide the instrument serial number, which can be found on the inner side of the bass end leg.

*Optimized for tuning environment temperature of 22ºC / 72ºF

Positioning tuning caps on notes with curved tubes:
C2. D2. E2. F2. G2. A2. C#2. D#2. F#2. G#2

1. Insert the scale (with the Majestic logo on top) so that it sits flat on the **inner surface** of the tuning cap as shown.

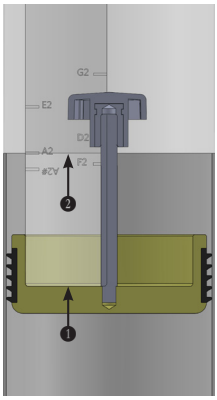

2. With scale remaining firmly against the tuning cap, use the push/pull knob to adjust the cap position so that the proper note name indicator aligns with the top edge of the resonators tube.

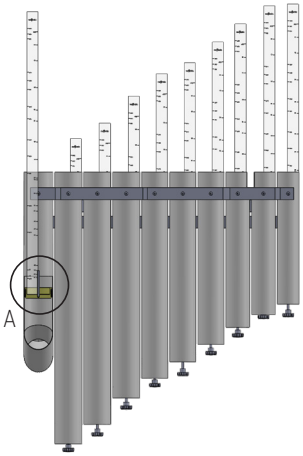

Detail (A)

Positioning tuning caps on notes with straight tubes:
B2. C3. D3. E3. F3. 3. A3. B3. C4. D4. E4. F4. G4. A4. B4
F#3. G#3. A#3. C#4. D#4. F#4. G#4. A#4

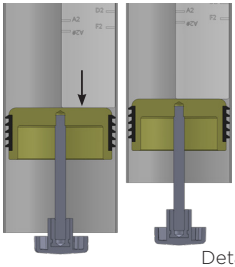

Detail (B)

1. Insert the scale (with the Majestic logo on the top) so that it sits flat on the **top surface** of the tuning cap as shown.

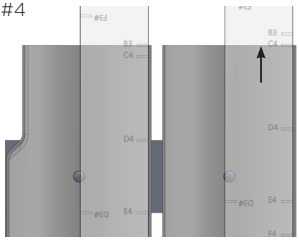

Detail (C)

2. With scale remaining firmly against the tuning cap, use the push/pull knob to adjust the cap position so that the proper note name indicator aligns with the top edge of the resonators tube.

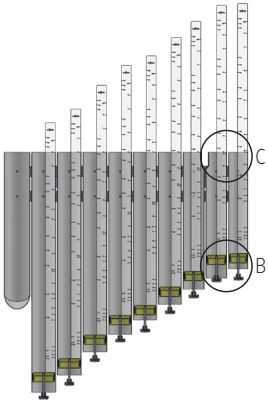

Positioning tuning caps on other notes: A#2. C#3. D#3

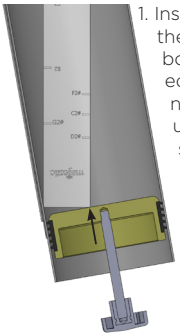

1. Insert the scale (with the Majestic logo on the bottom) so that the edge with the needed note label is directly up against the inner side tube wall, sliding down until it makes contact with the top of the tuning cap.

Detail (D)

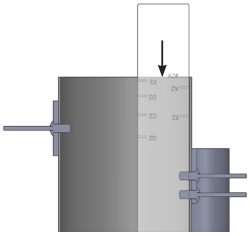

Detail (E)

2. With scale remaining firmly against the tuning cap and the length of the **inner side** tube wall, use the push/pull knob to adjust the cap position so that the proper note name indicator aligns with the top edge of the resonators tube.

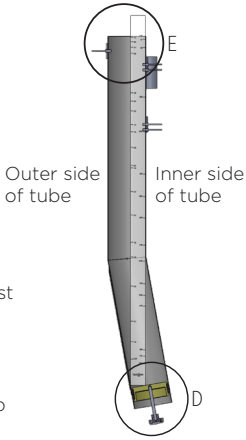

Maintenance Notes

majestic

majesticpercussion.com

Ver. 202002